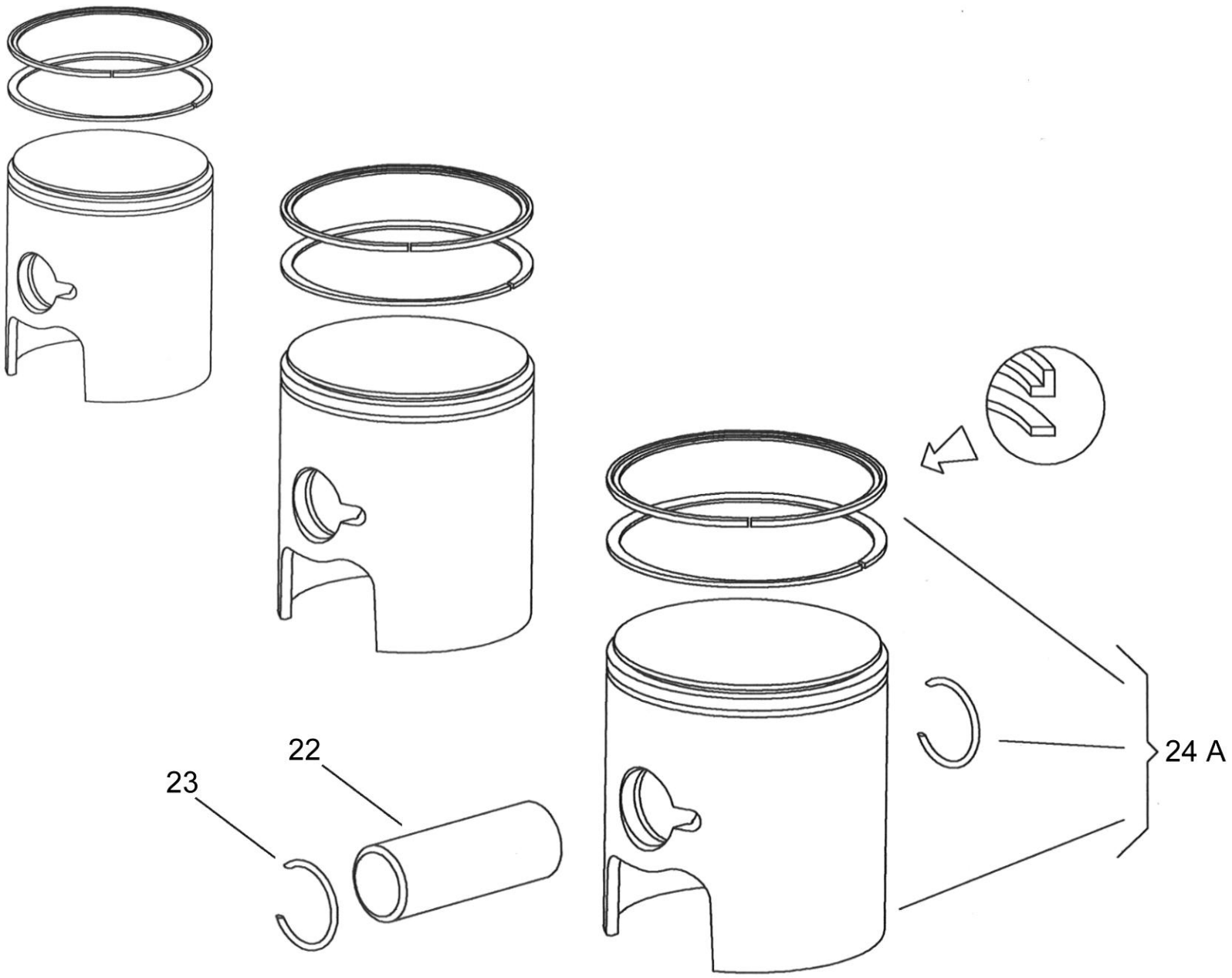
22
23
24 A

22	B-71320	PISTON PIN
23	10341-A	CIRCLIPS
23	10341-USA	CIRCLIP—SPIRAL LOX
24A	D-71051-CR	PISTON ASSY--52.40
	D-71051-CV	PISTON ASSY--52.40
	D-71056-CR	PISTON ASSY--52.42
	D-71056-CV	PISTON ASSY--52.42
	D-71059-CR	PISTON ASSY--52.45
	D-71059-CV	PISTON ASSY--52.45
	D-71061-CV	PISTON ASSY--52.50
	D-71061-CV	PISTON ASSY--52.50
	D-71066-CR	PISTON ASSY--52.52
	D-71066-CV	PISTON ASSY--52.52
	D-71069-CR	PISTON ASSY--52.55
	D-71069-CV	PISTON ASSY--52.55
	D-71071-CR	PISTON ASSY--52.60
	D-71071-CV	PISTON ASSY--52.60
	D-71076-CR	PISTON ASSY--52.62
	D-71076-CV	PISTON ASSY--52.62
	D-71079-CR	PISTON ASSY--52.65
	D-71079-CV	PISTON ASSY--52.65
	D-71081-CR	PISTON ASSY--52.70
	D-71081-CV	PISTON ASSY--52.70
	D-71086-CR	PISTON ASSY--52.72
	D-71086-CV	PISTON ASSY--52.72
	D-71089-CR	PISTON ASSY--52.75
	D-71089-CV	PISTON ASSY--52.75
	D-71091-CR	PISTON ASSY--52.80
	D-71091-CV	PISTON ASSY--52.80
	D-71096-CR	PISTON ASSY--52.82
	D-71096-CV	PISTON ASSY--52.82
	D-71099-CR	PISTON ASSY--52.85
	D-71099-CV	PISTON ASSY--52.85
	D-71101-CR	PISTON ASSY--52.90
	D-71101-CV	PISTON ASSY--52.90

CR = RED
CV = GREEN